a

2 x
3,5 x 16

b

2 x
4,5 x 25

c

16 x
4,5 x 16

d

4 x
M8 x 20

e

10 x
M8 x 20SP

f

2 x
M8

g

4 x
ø50

h

1 x
8/13

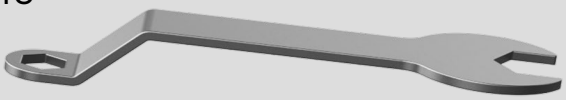

i

1 x
no. 6

FIXING KIT

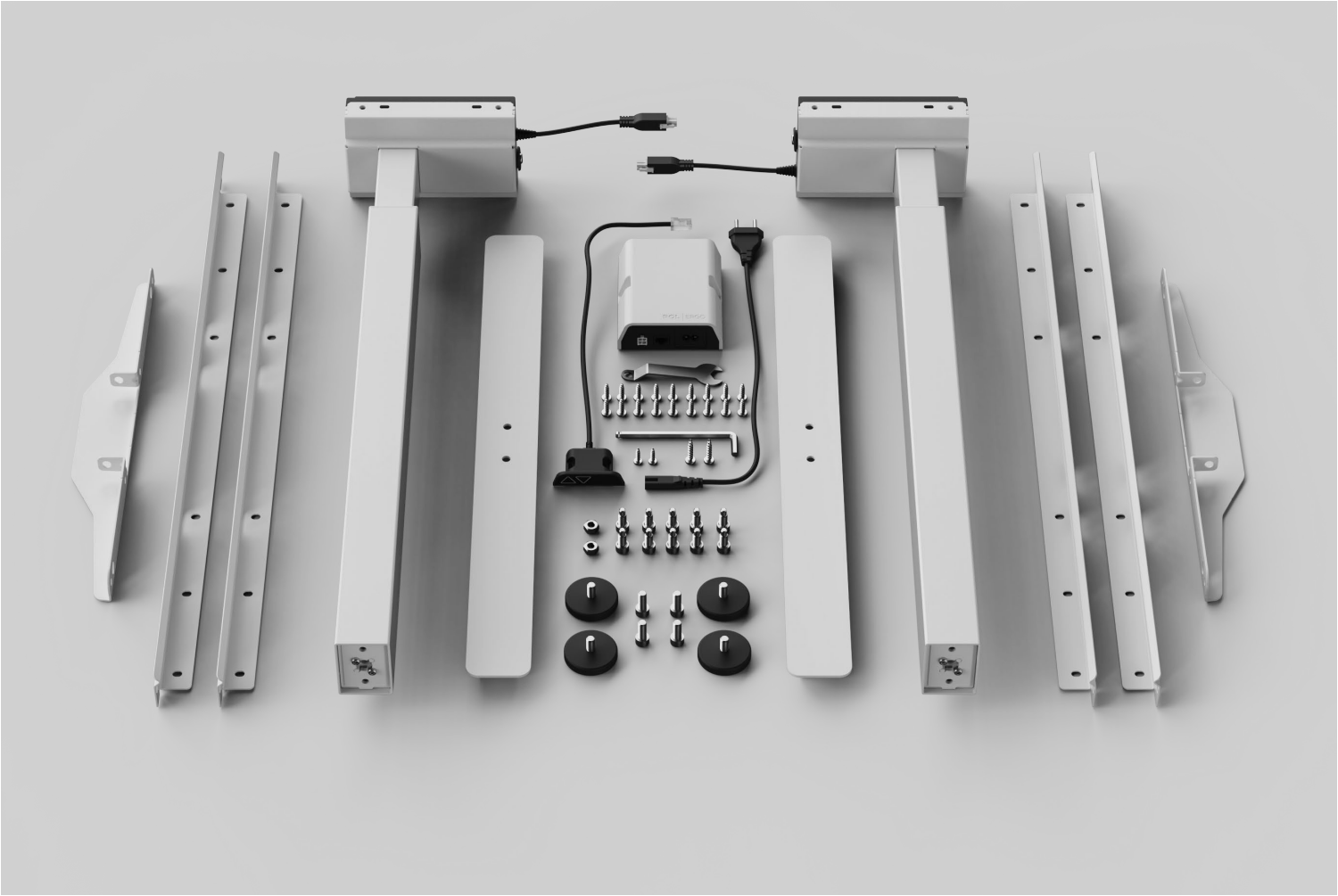

EXTRA TOOLS

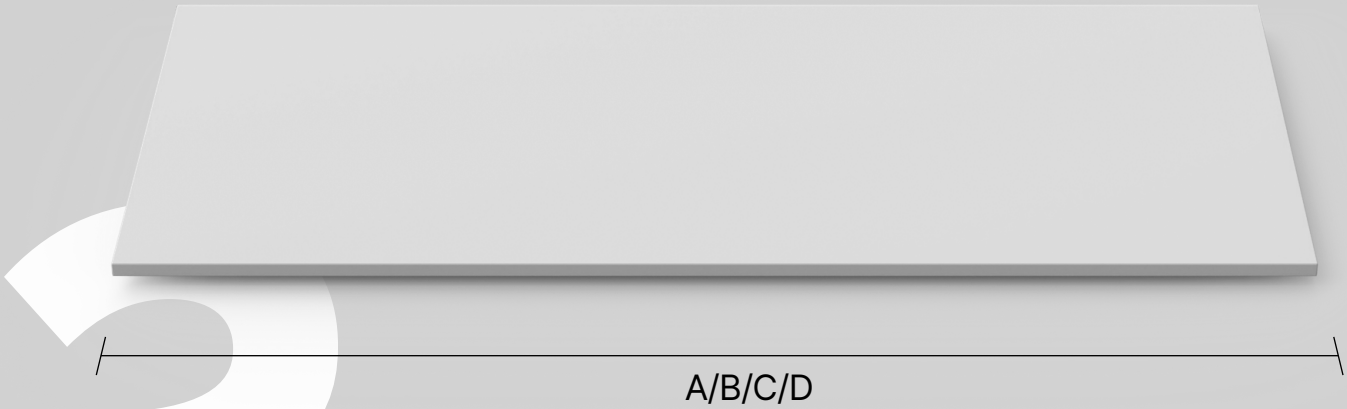
A/B/C/D

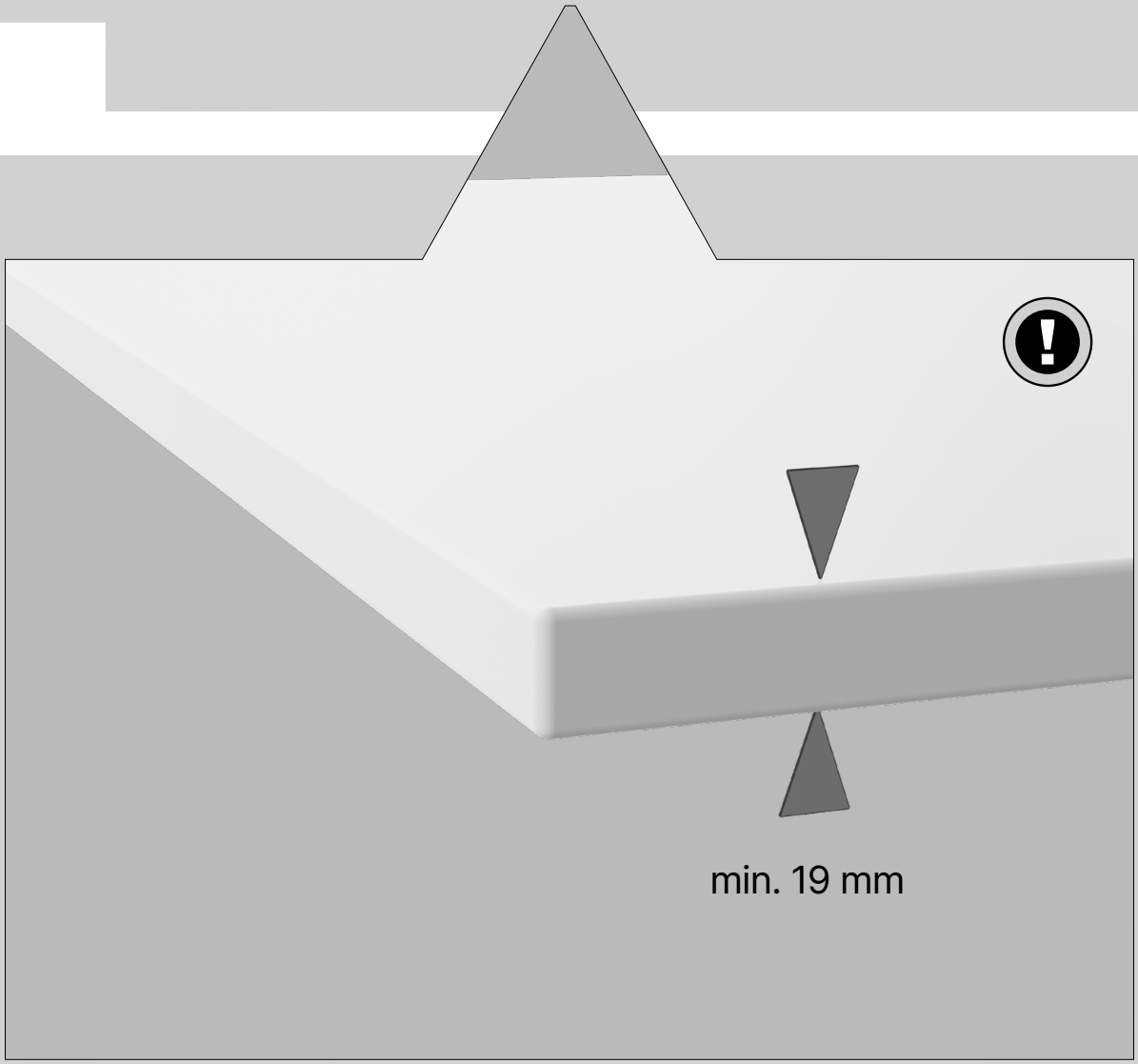
min. 19 mm

A

1000 mm

01

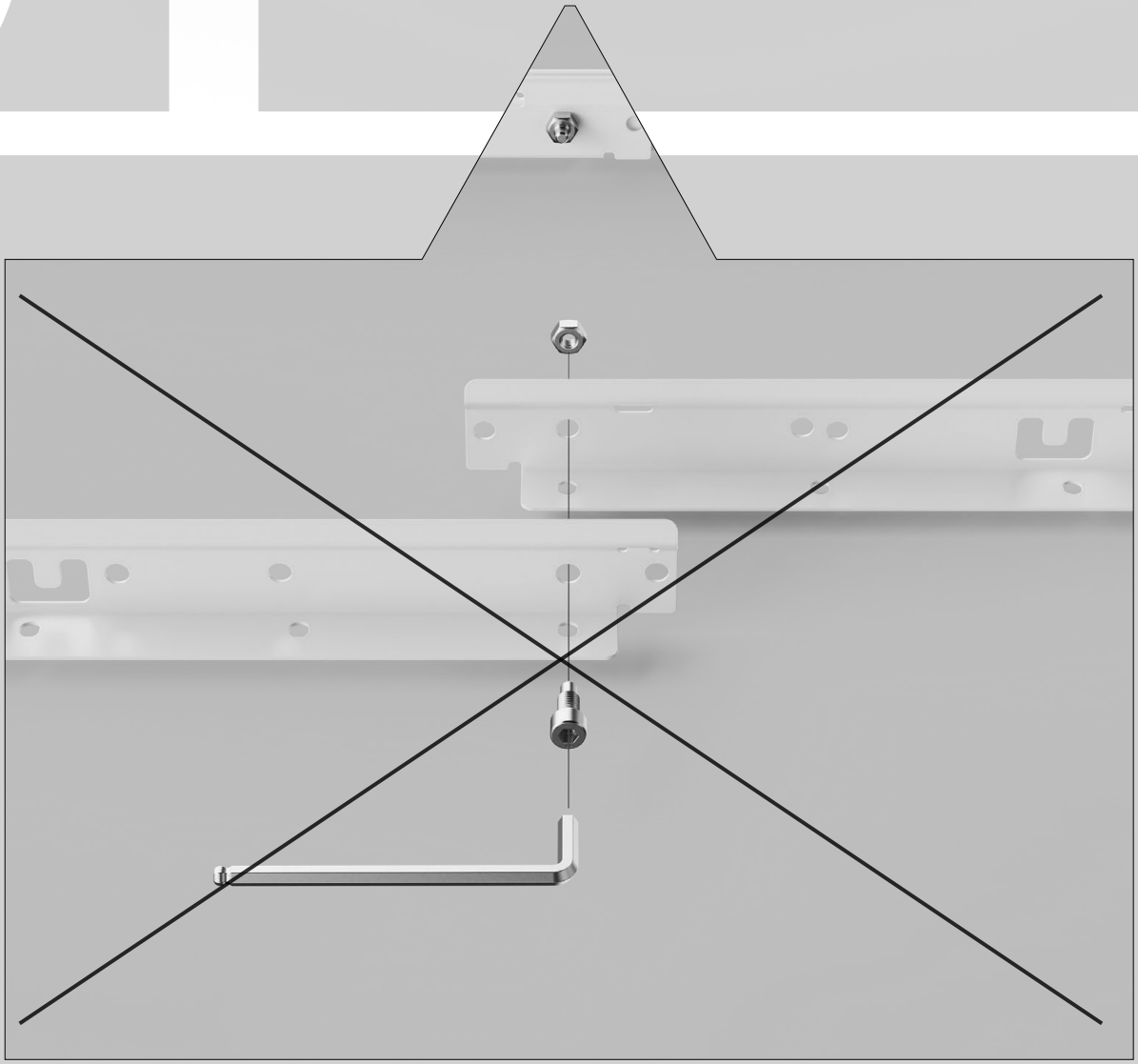

B

1200 mm

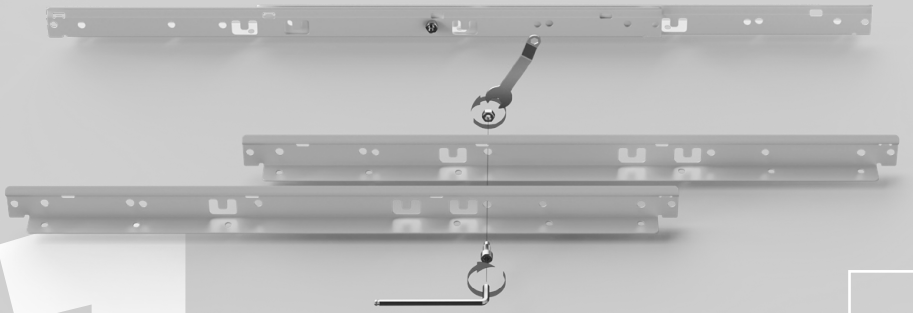

01

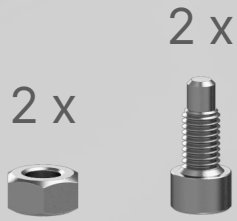

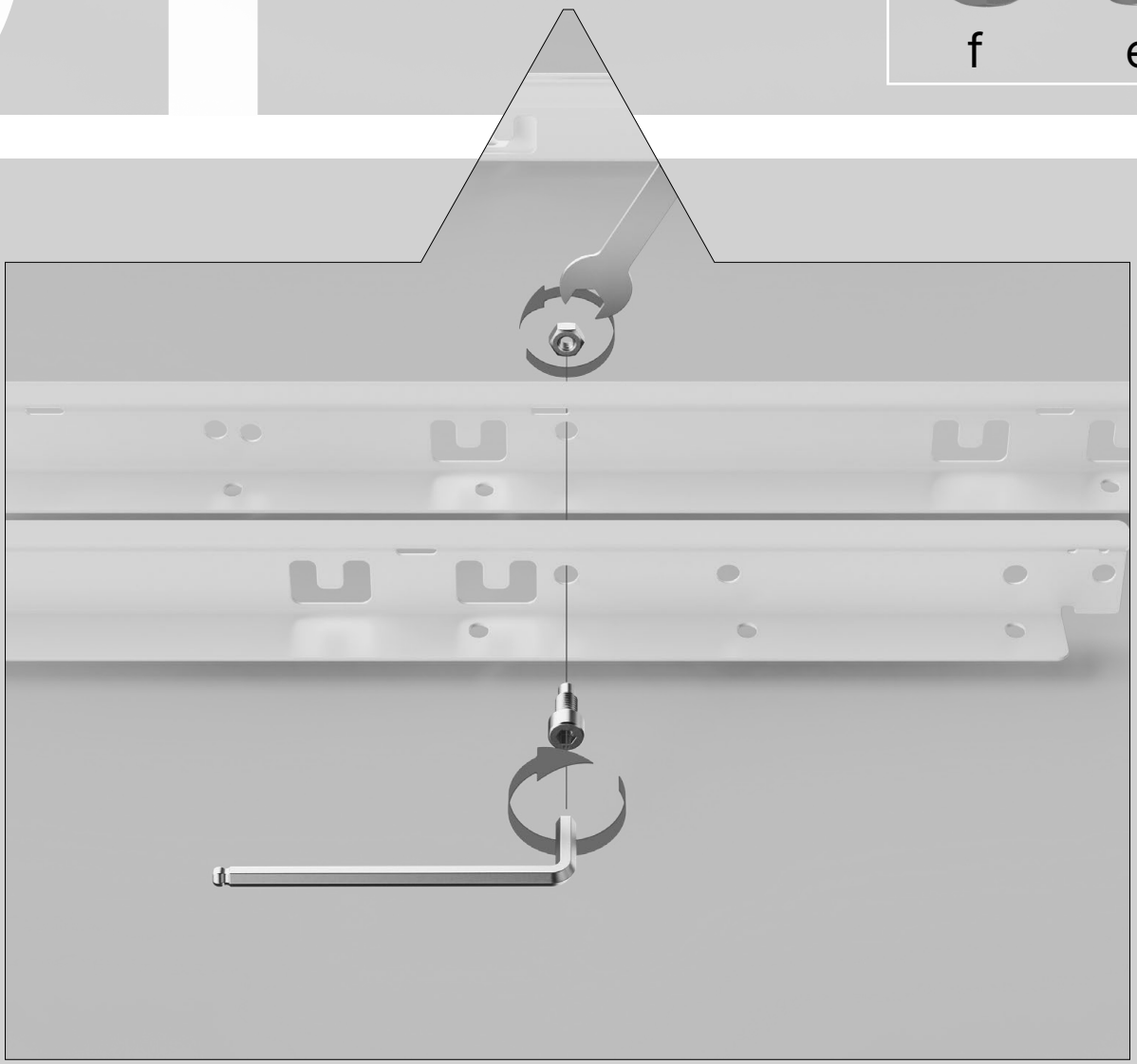

C

1400 mm

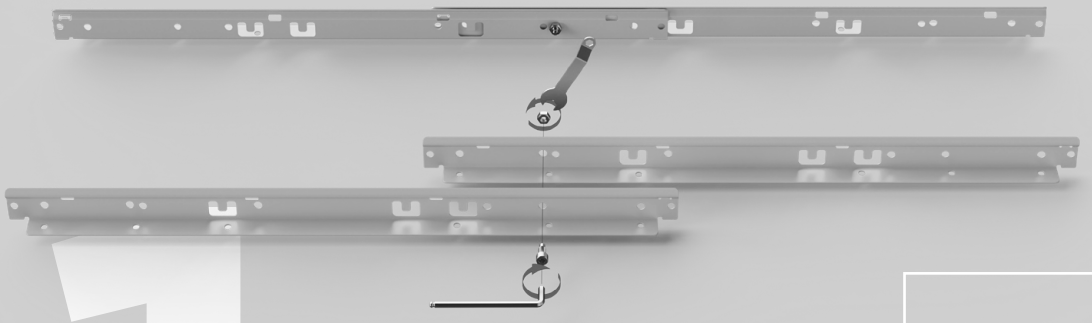

01

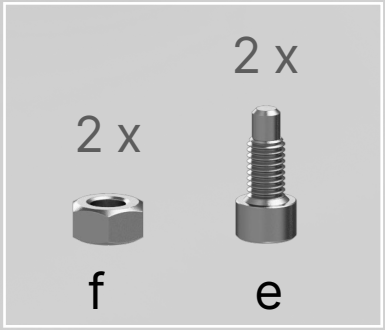

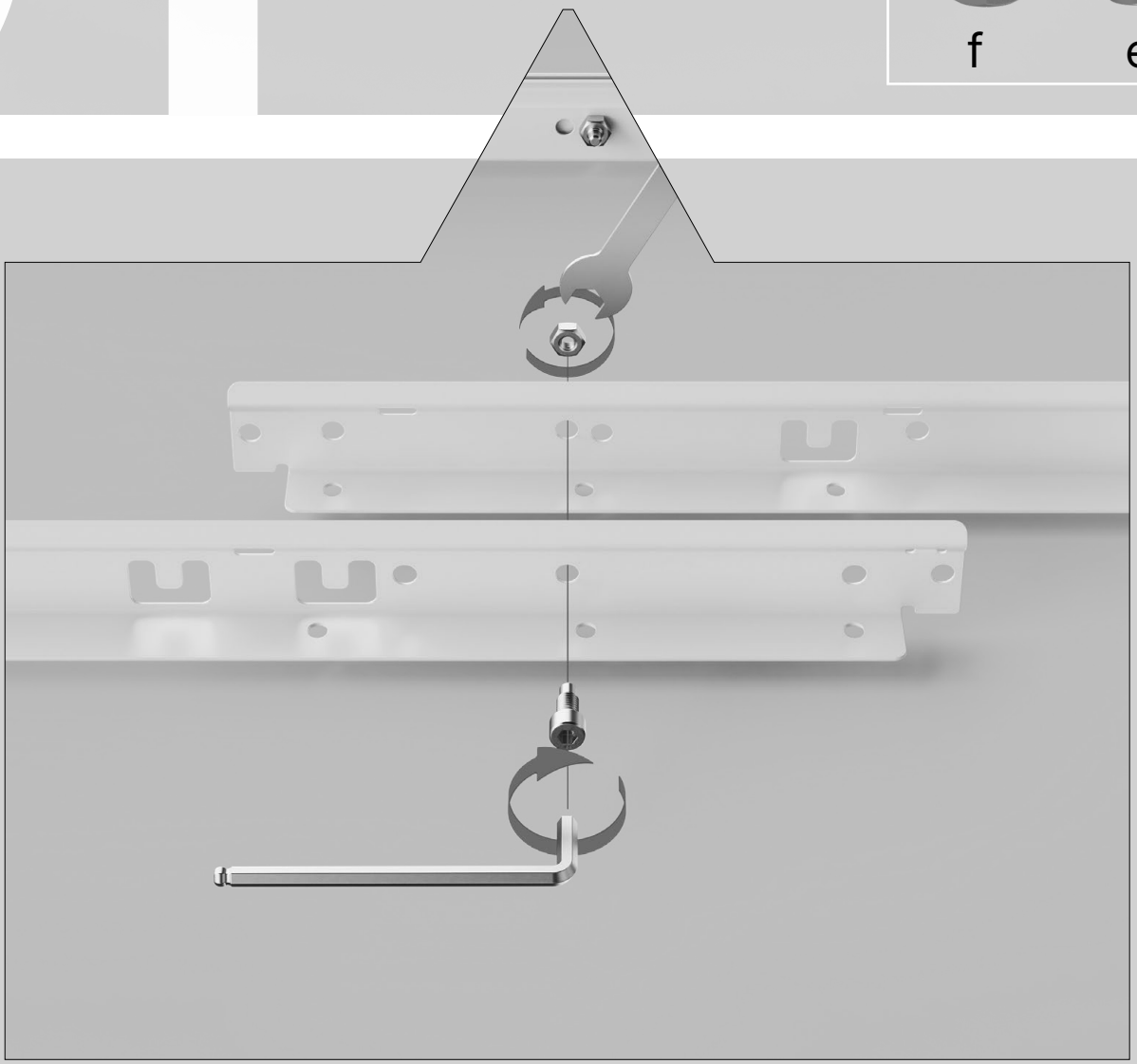

D

≥ 1600 mm

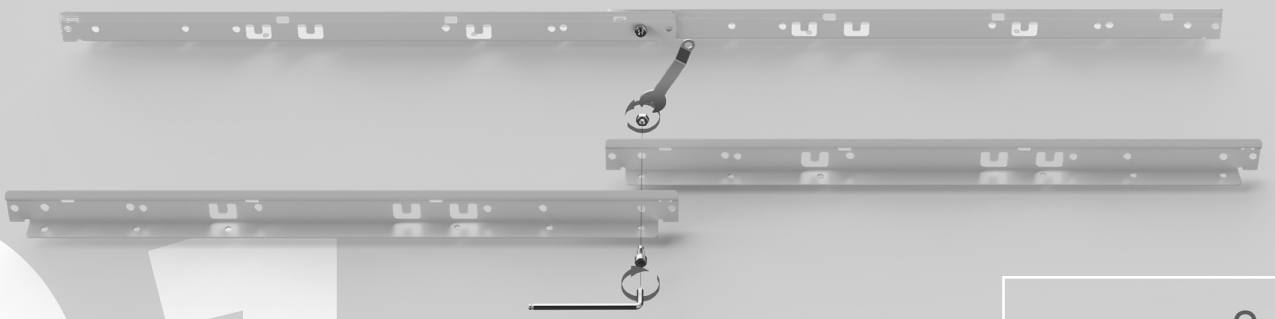

01

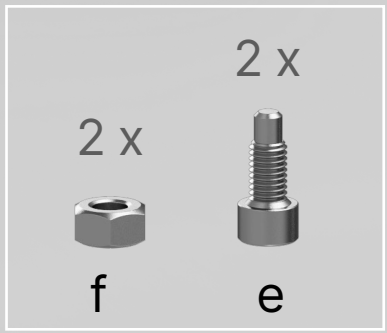

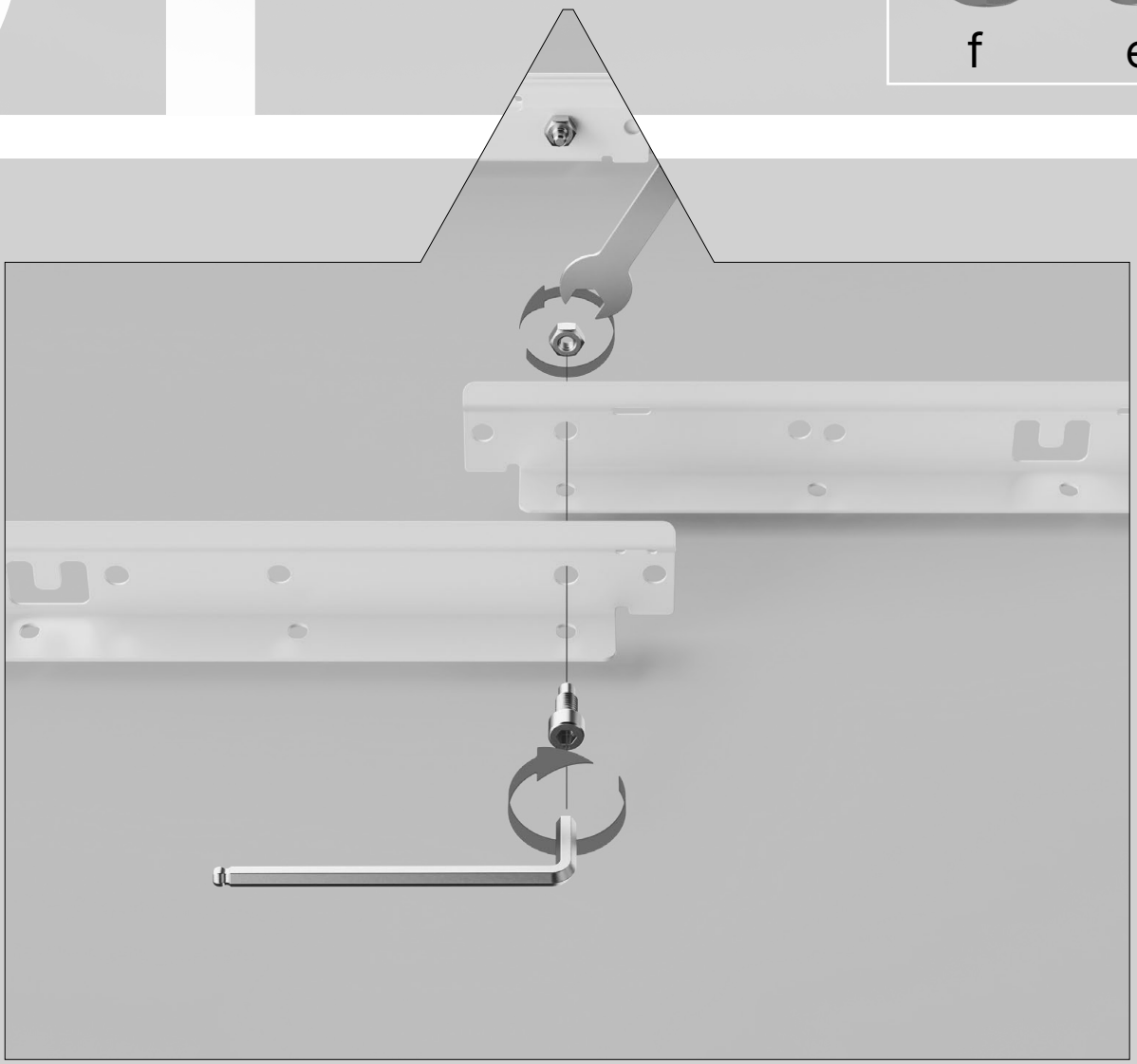

02

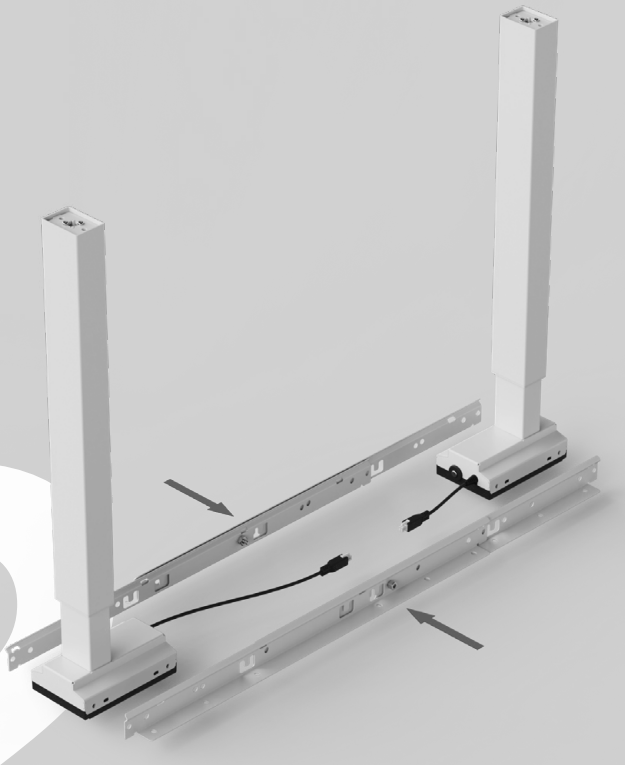

4 x

e

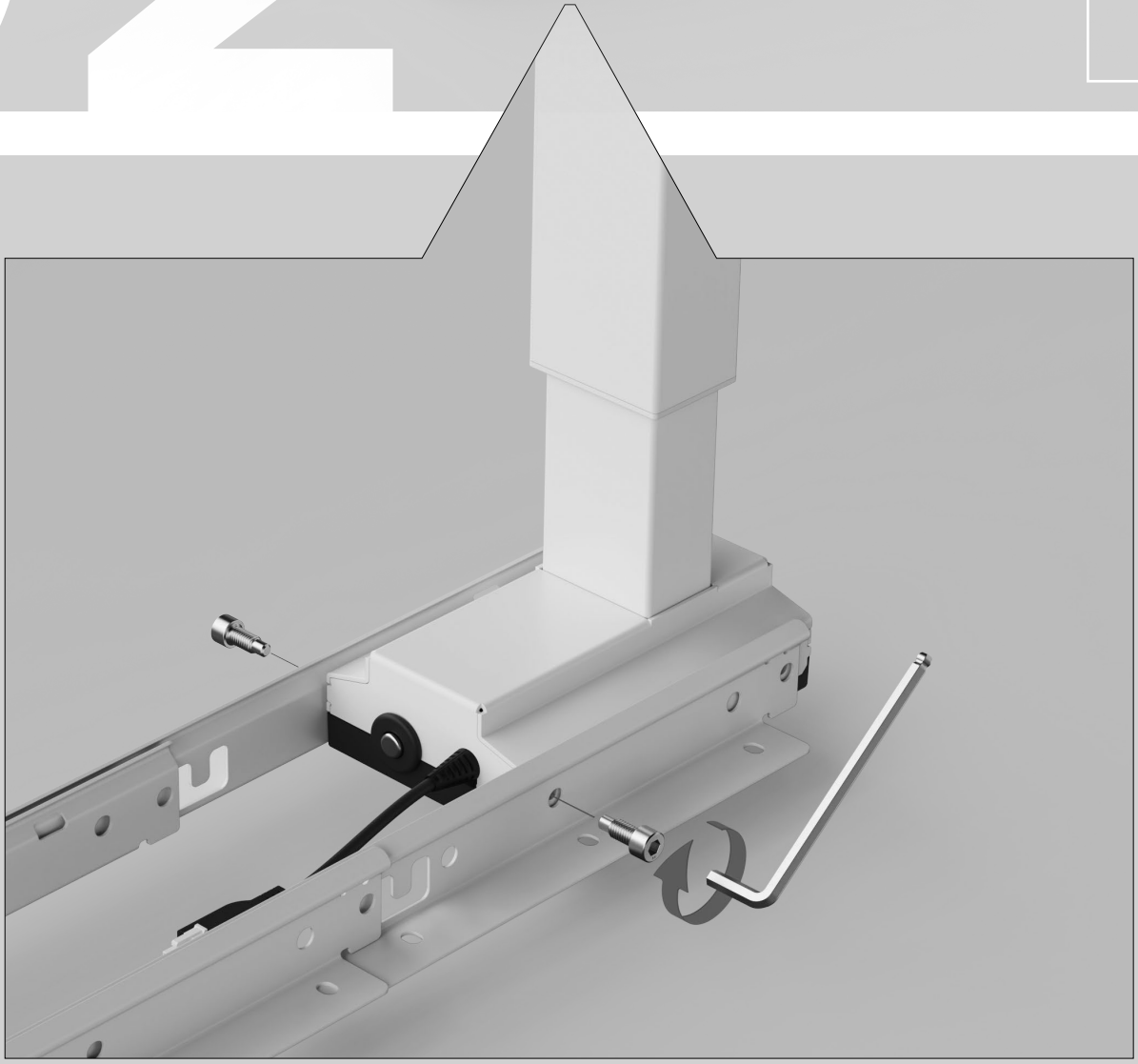

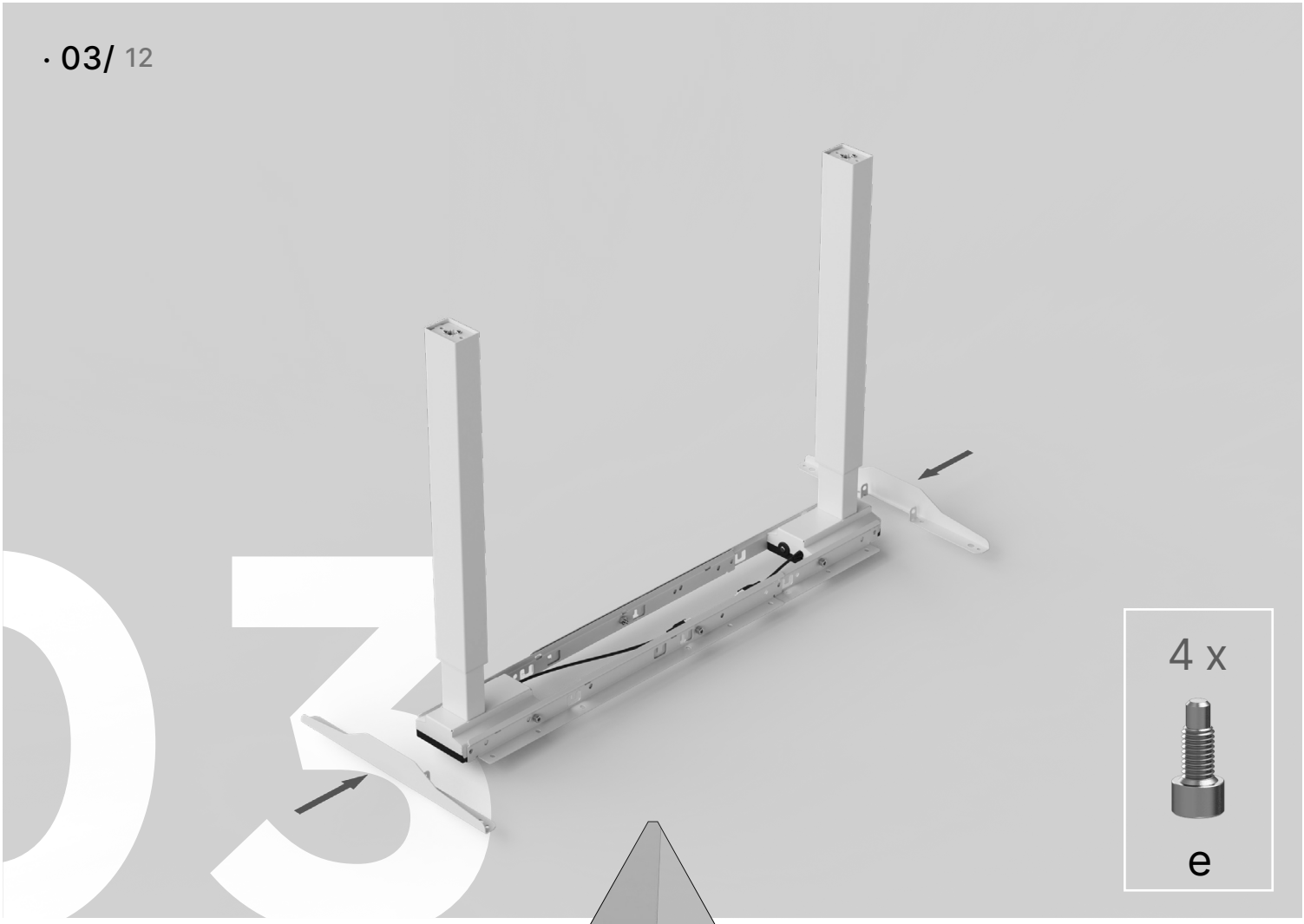
03
4 x
e

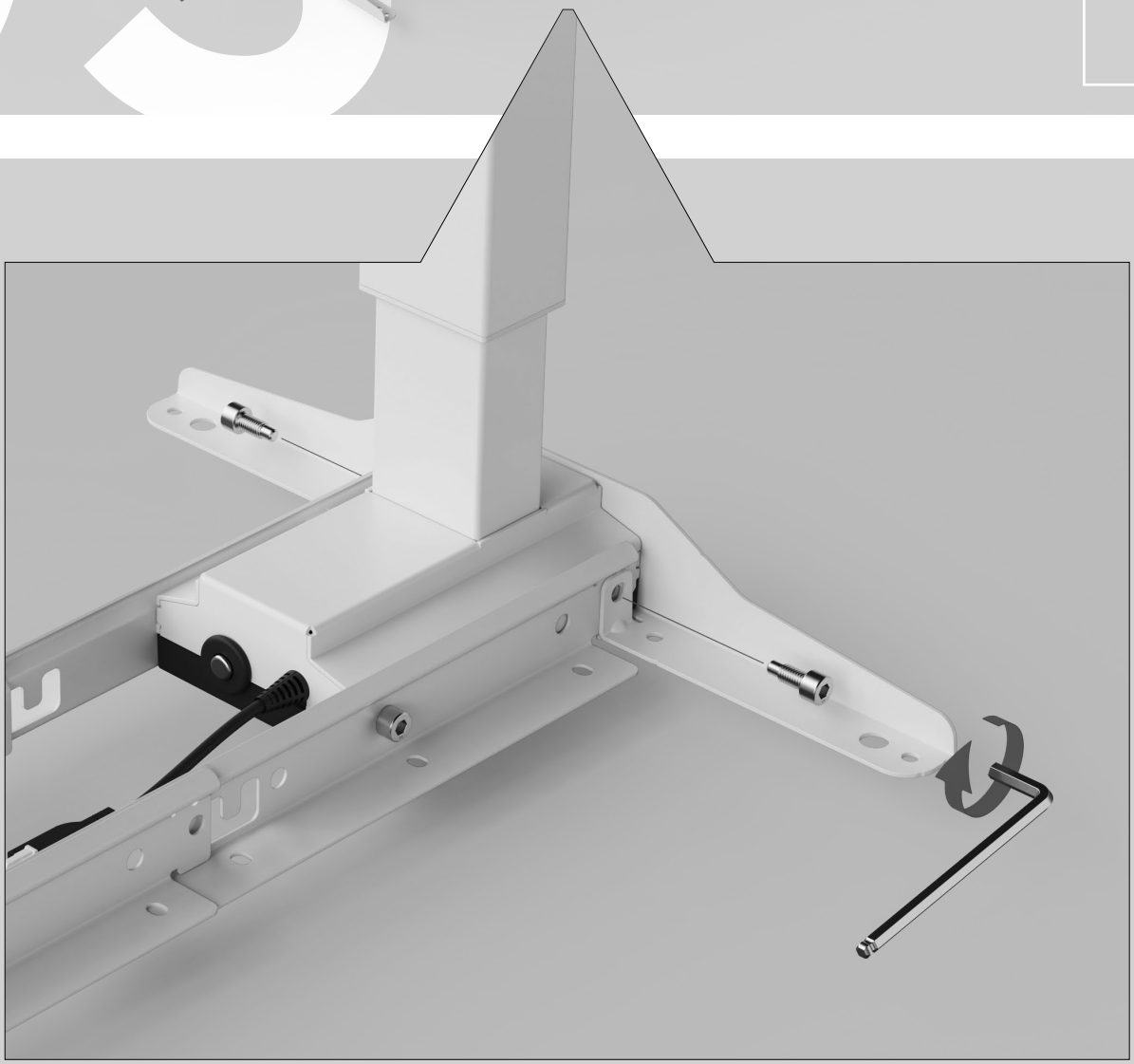

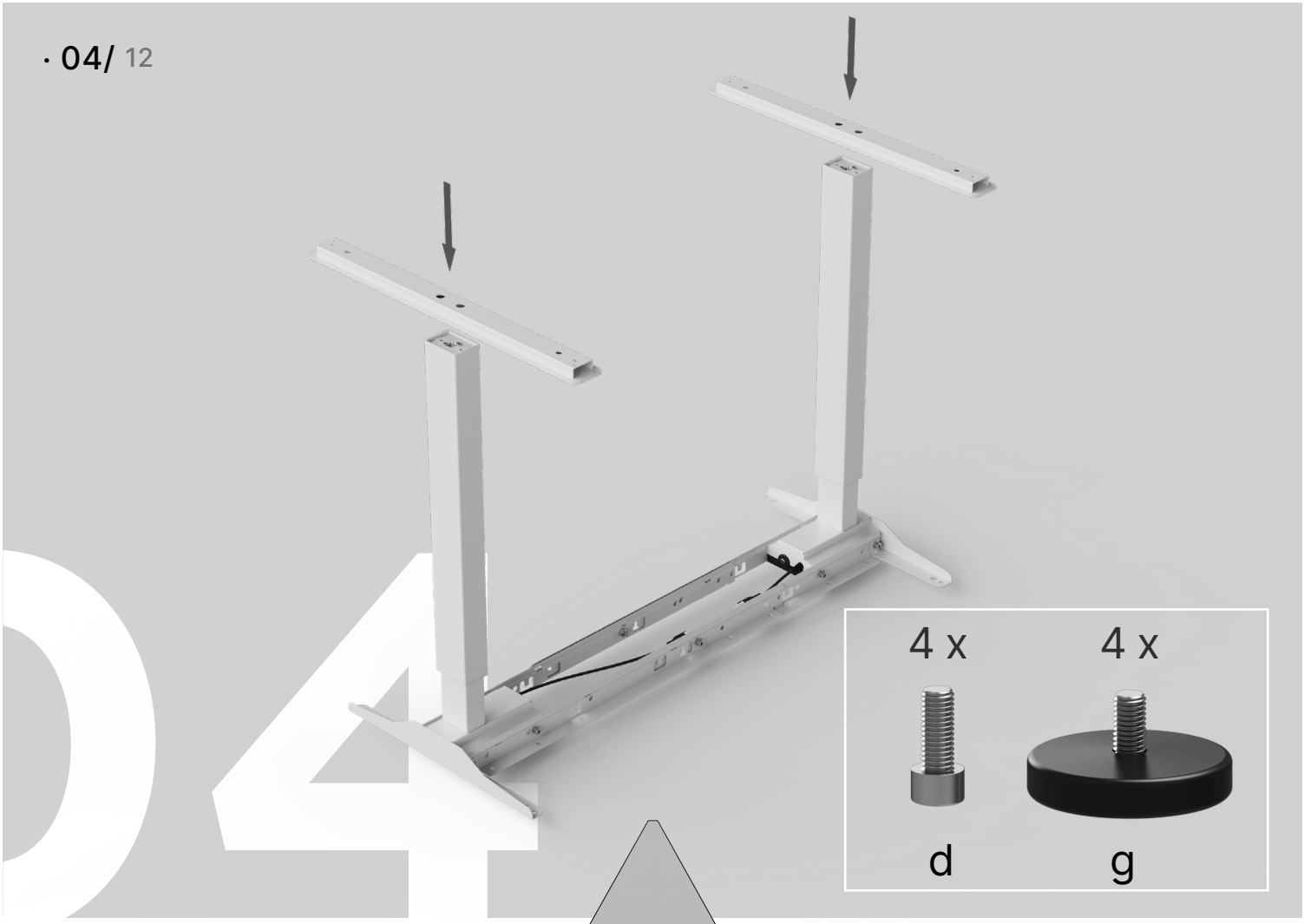
04
4 x
4 x
d
g

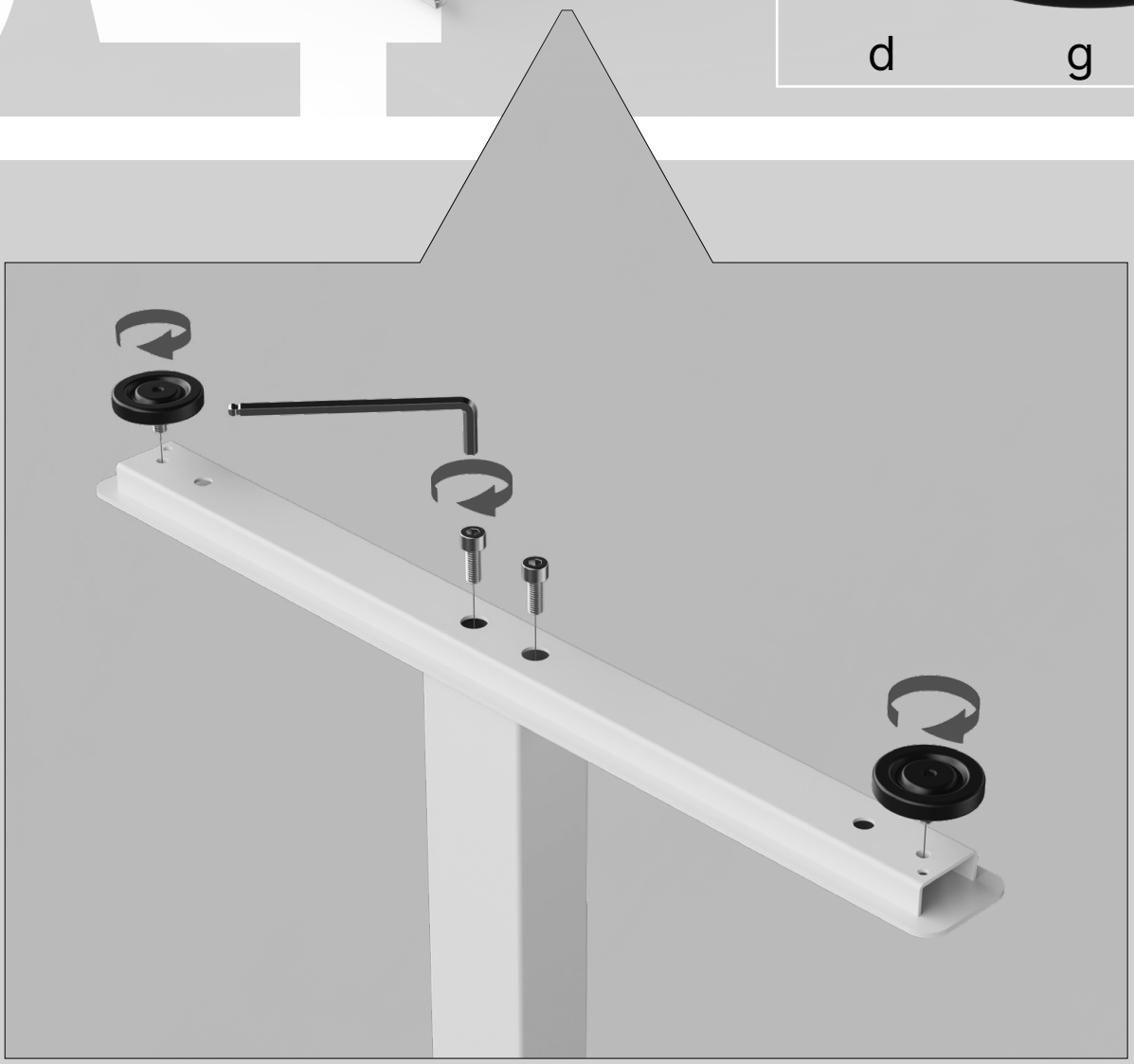

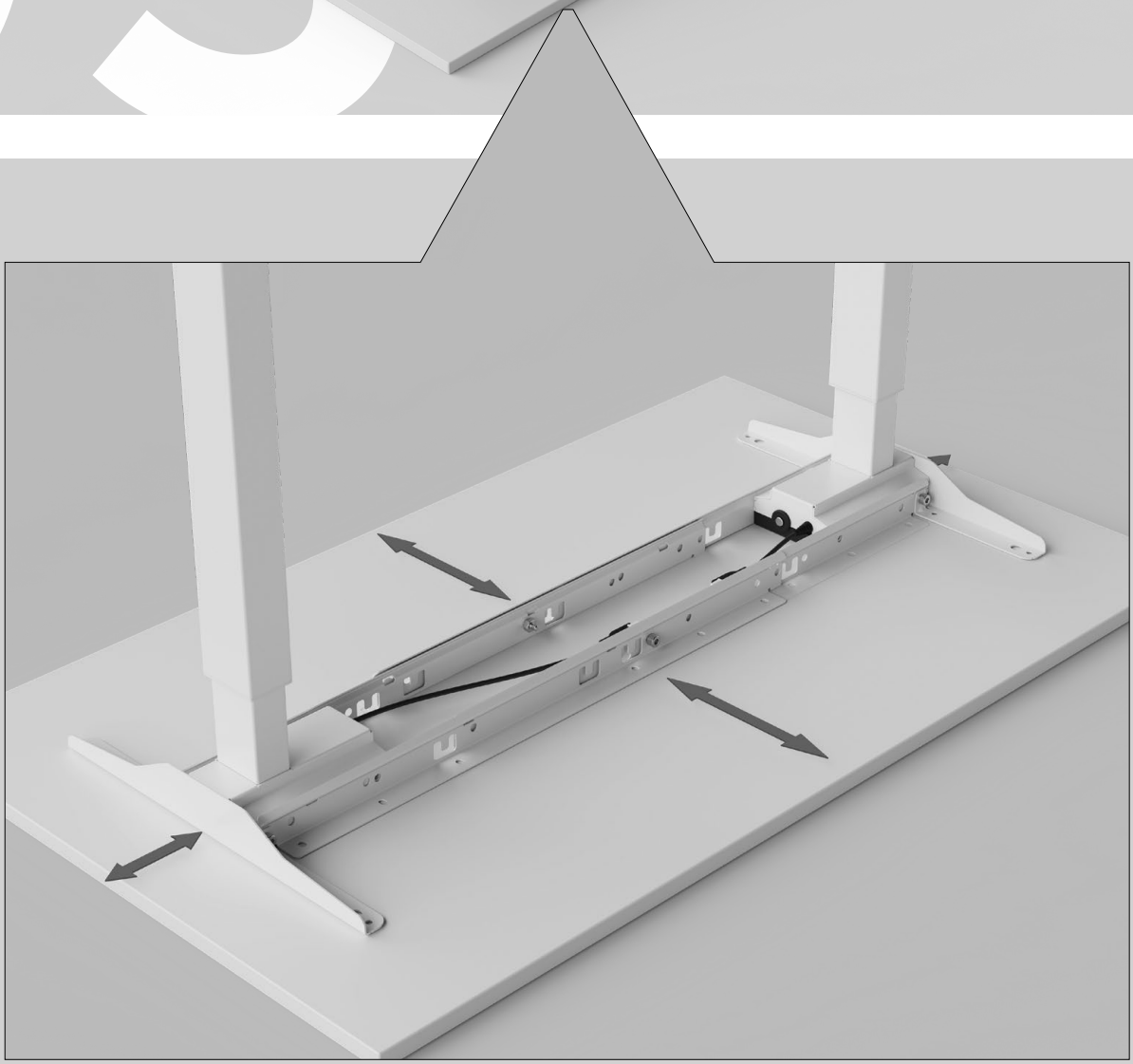

16 x
C

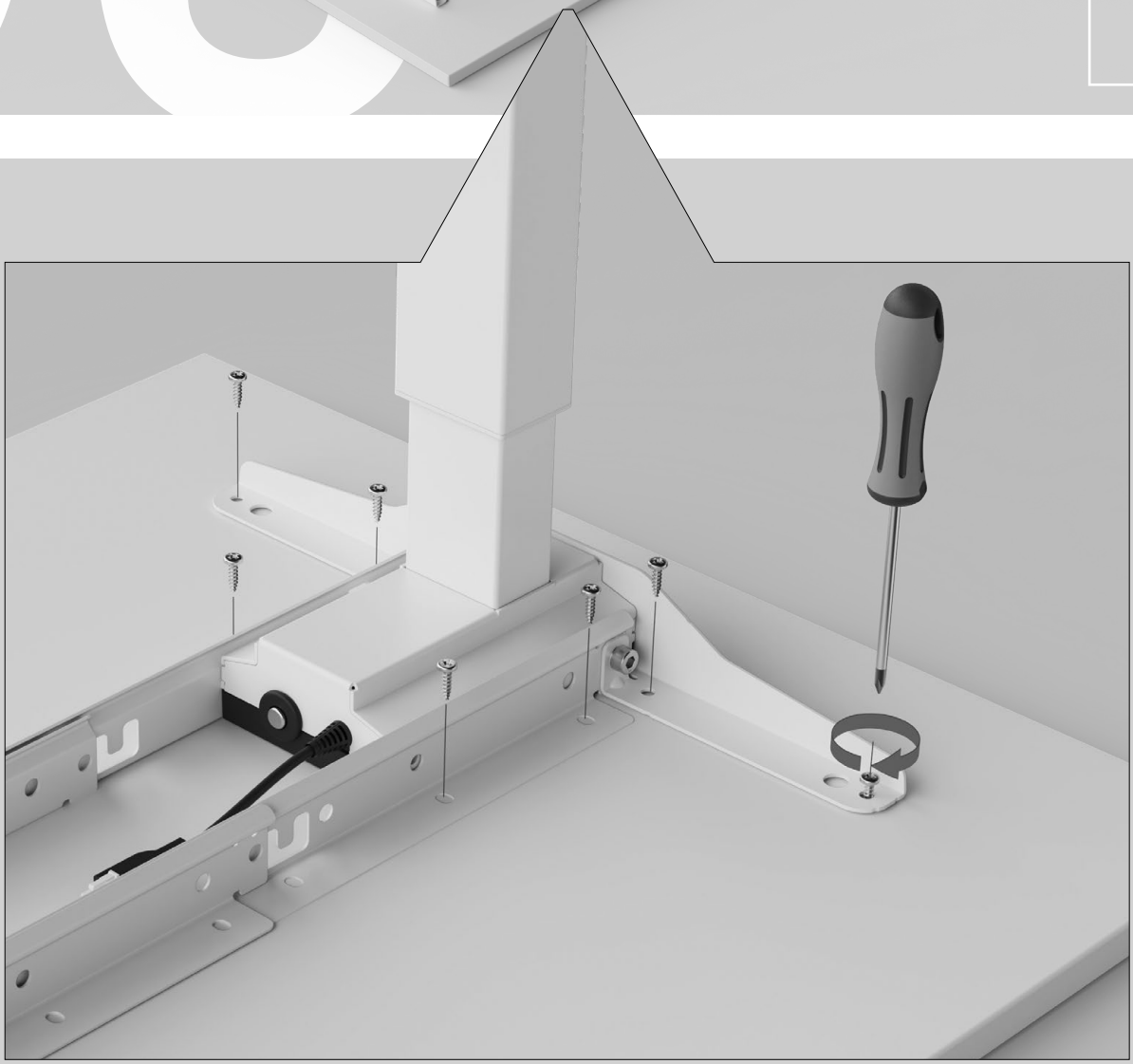

2 x
a

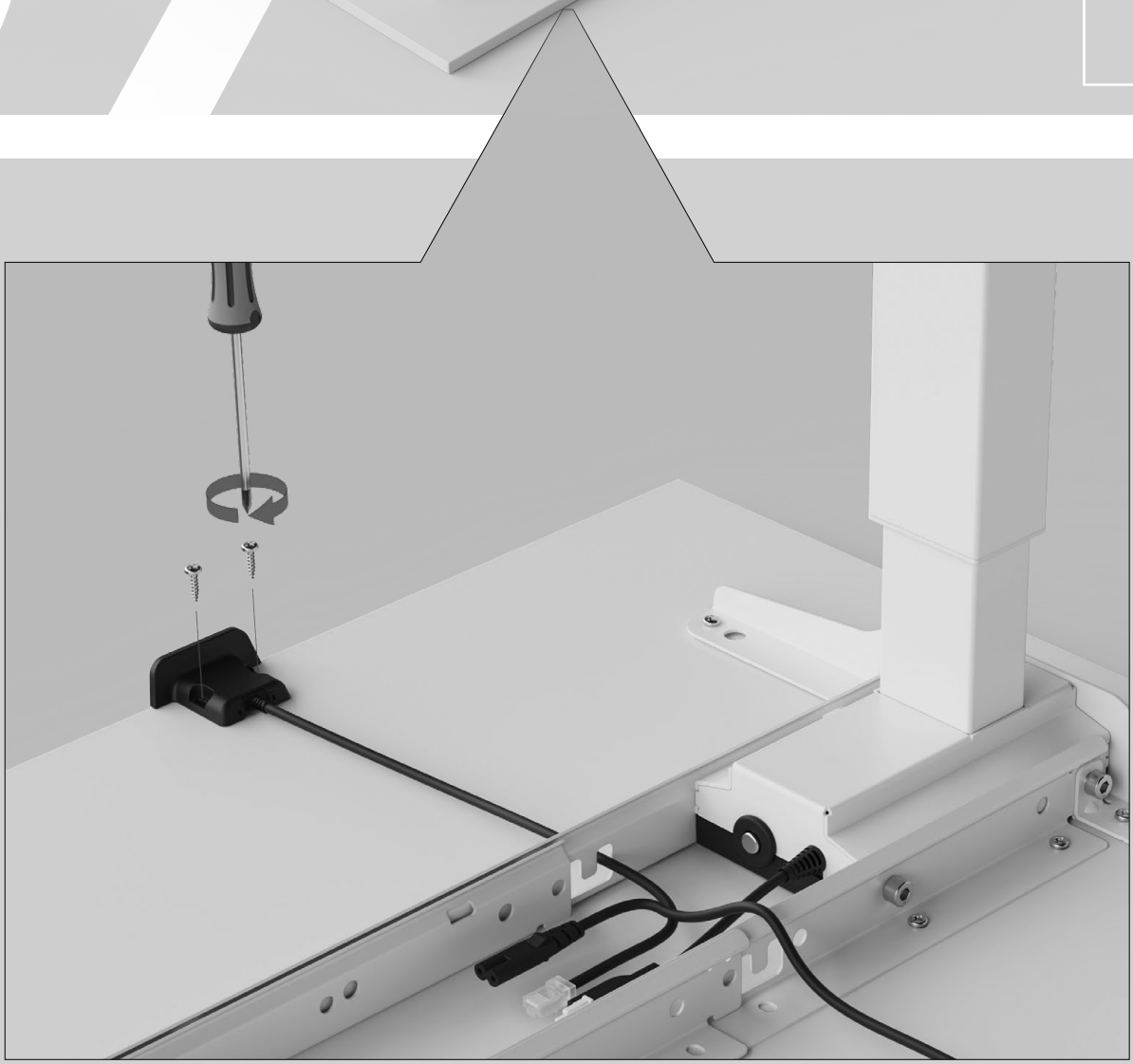

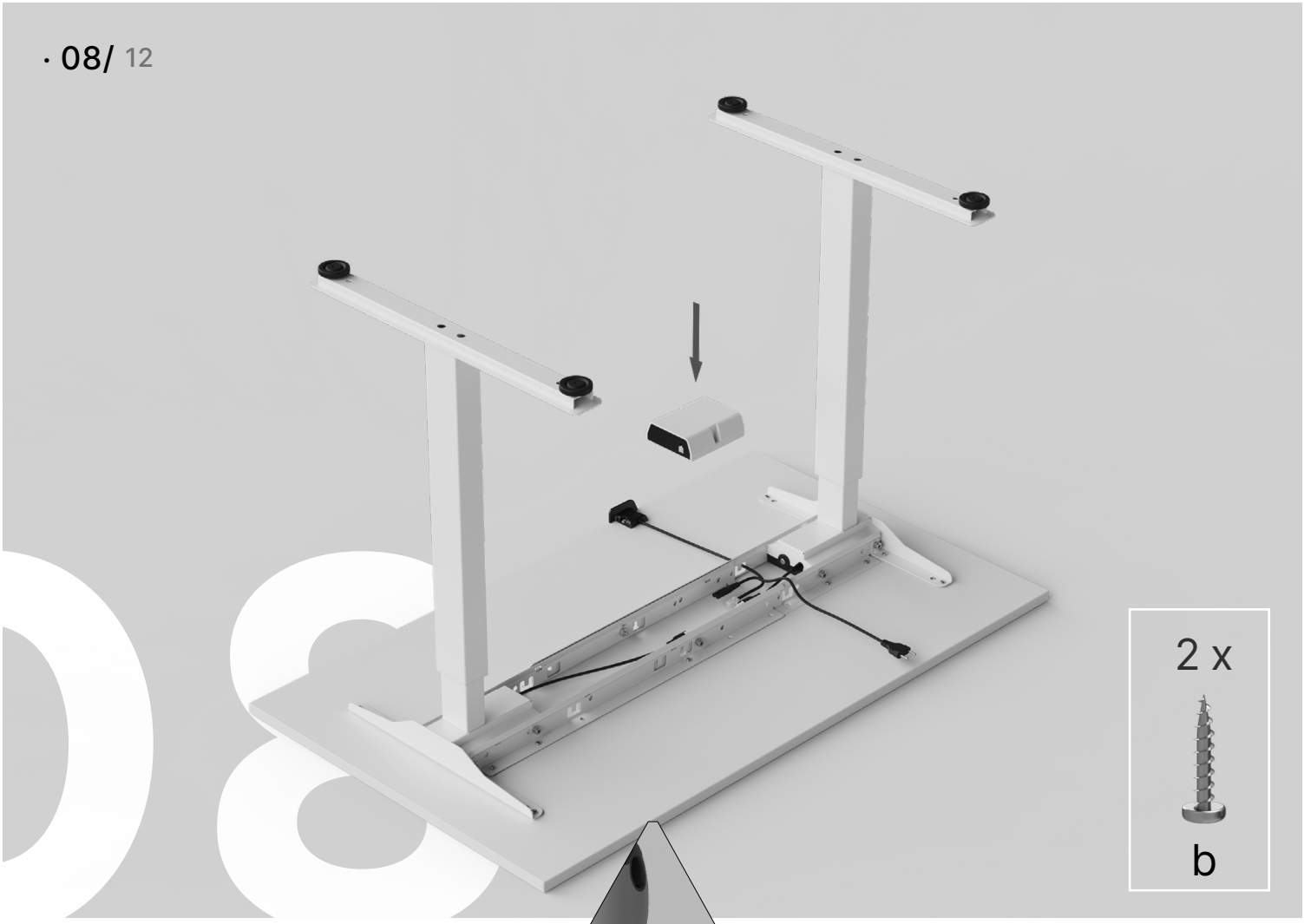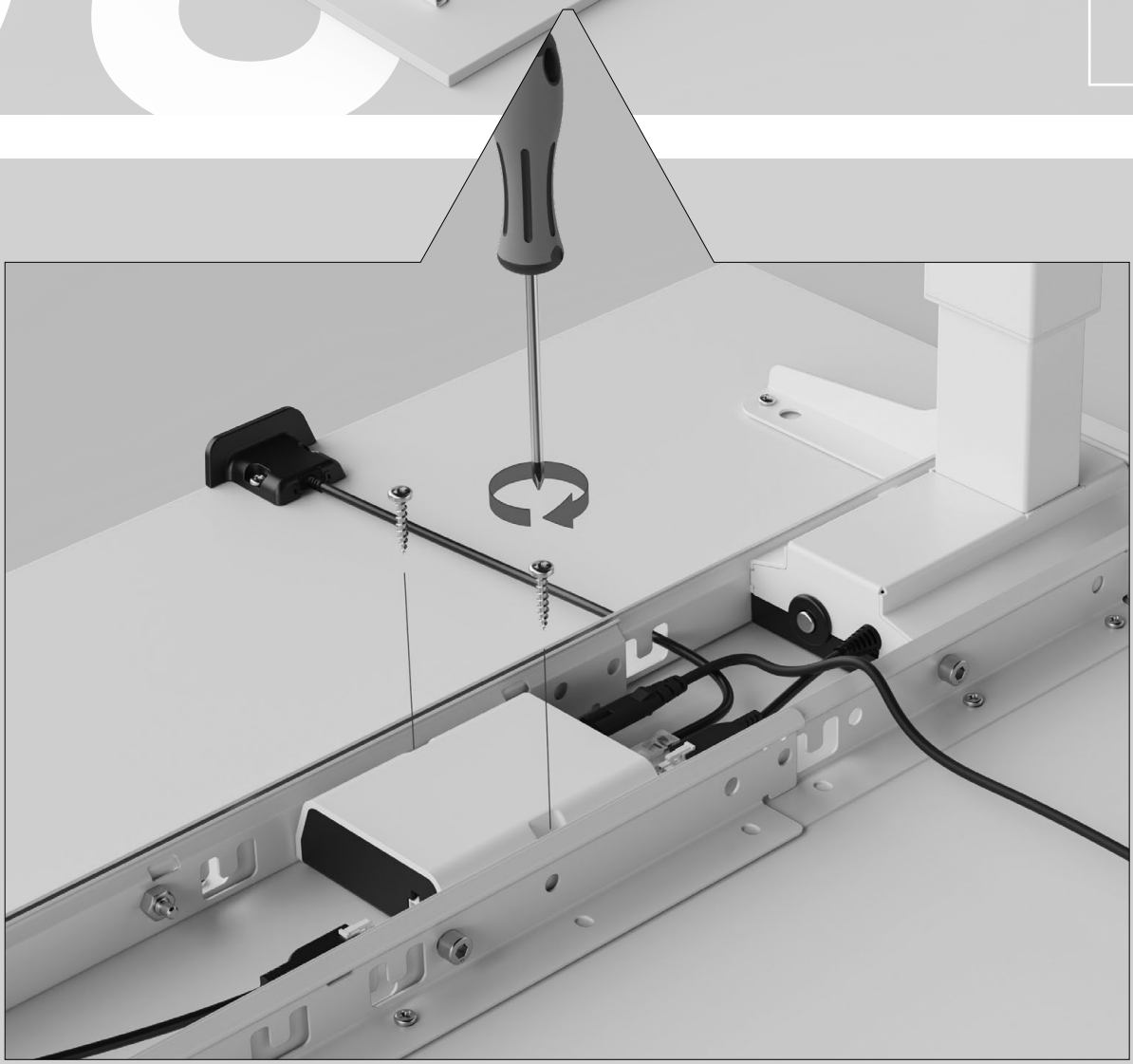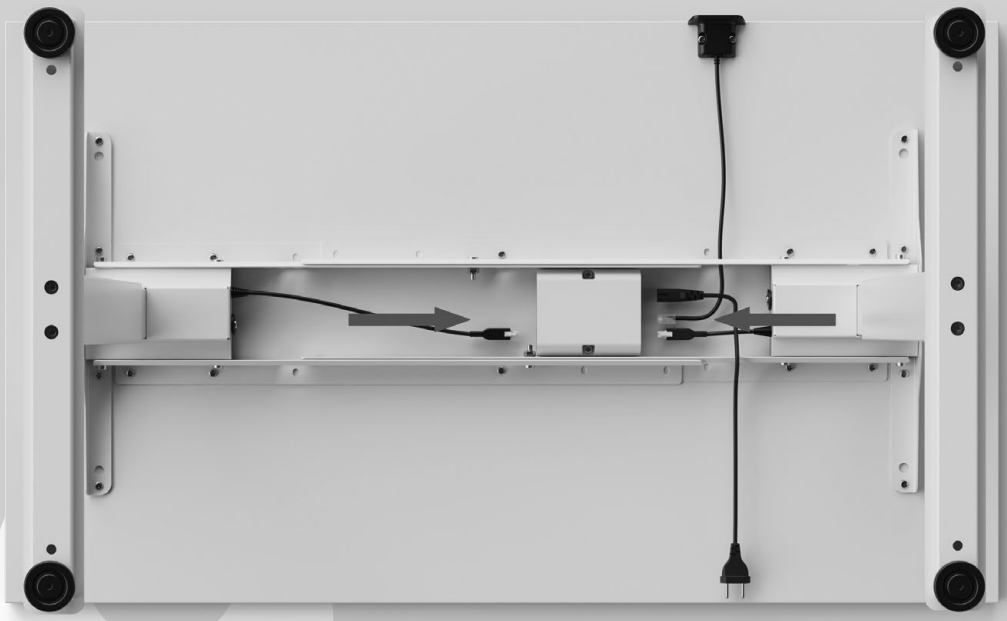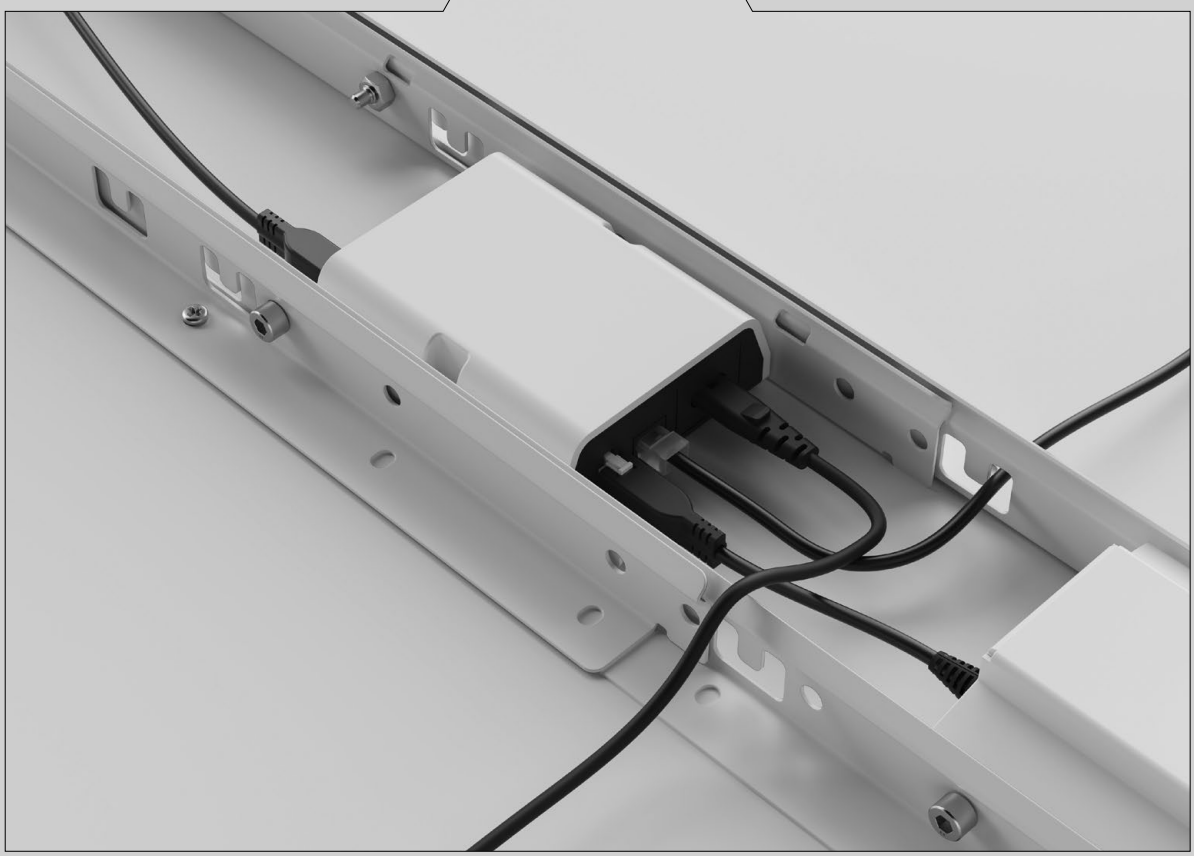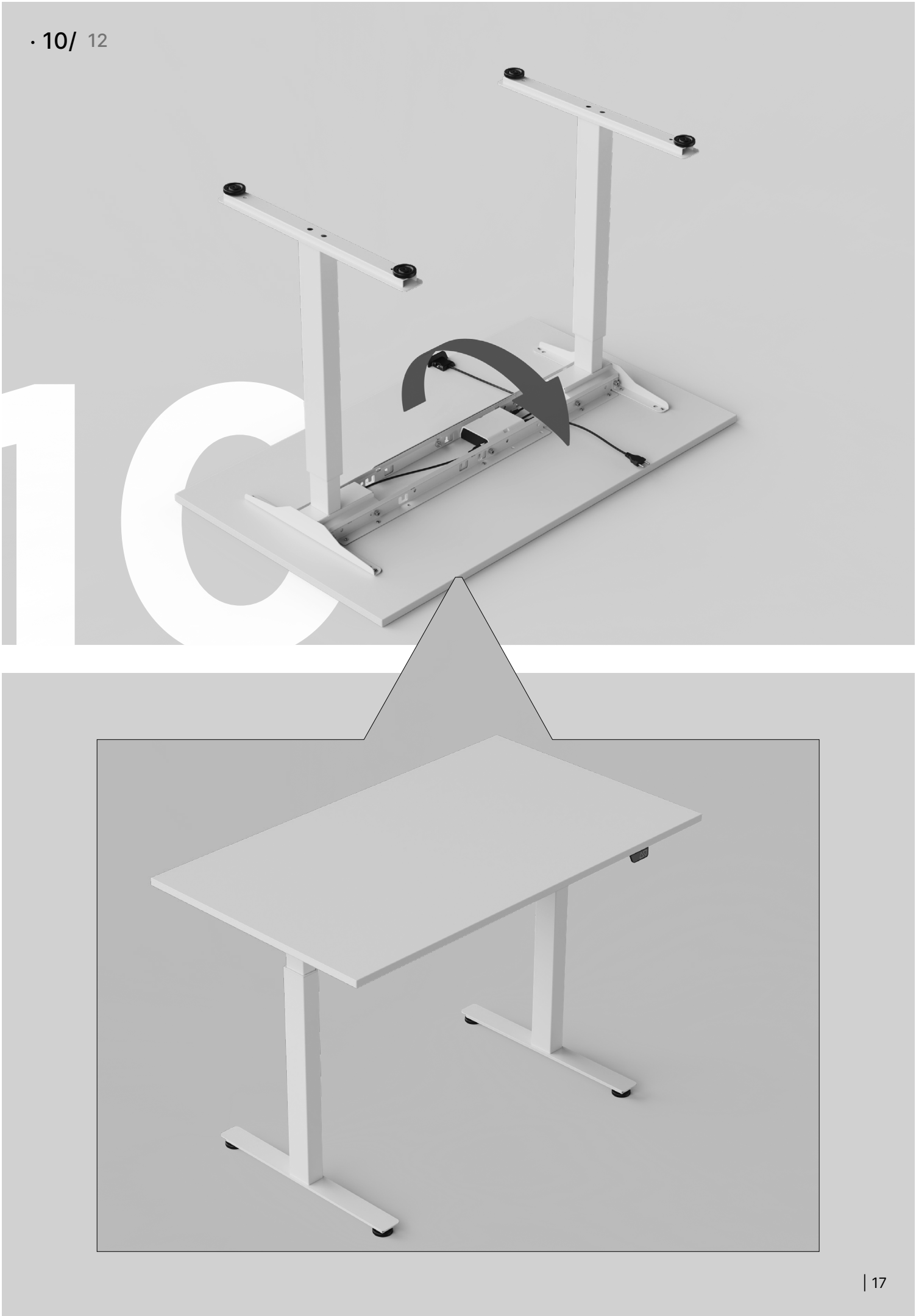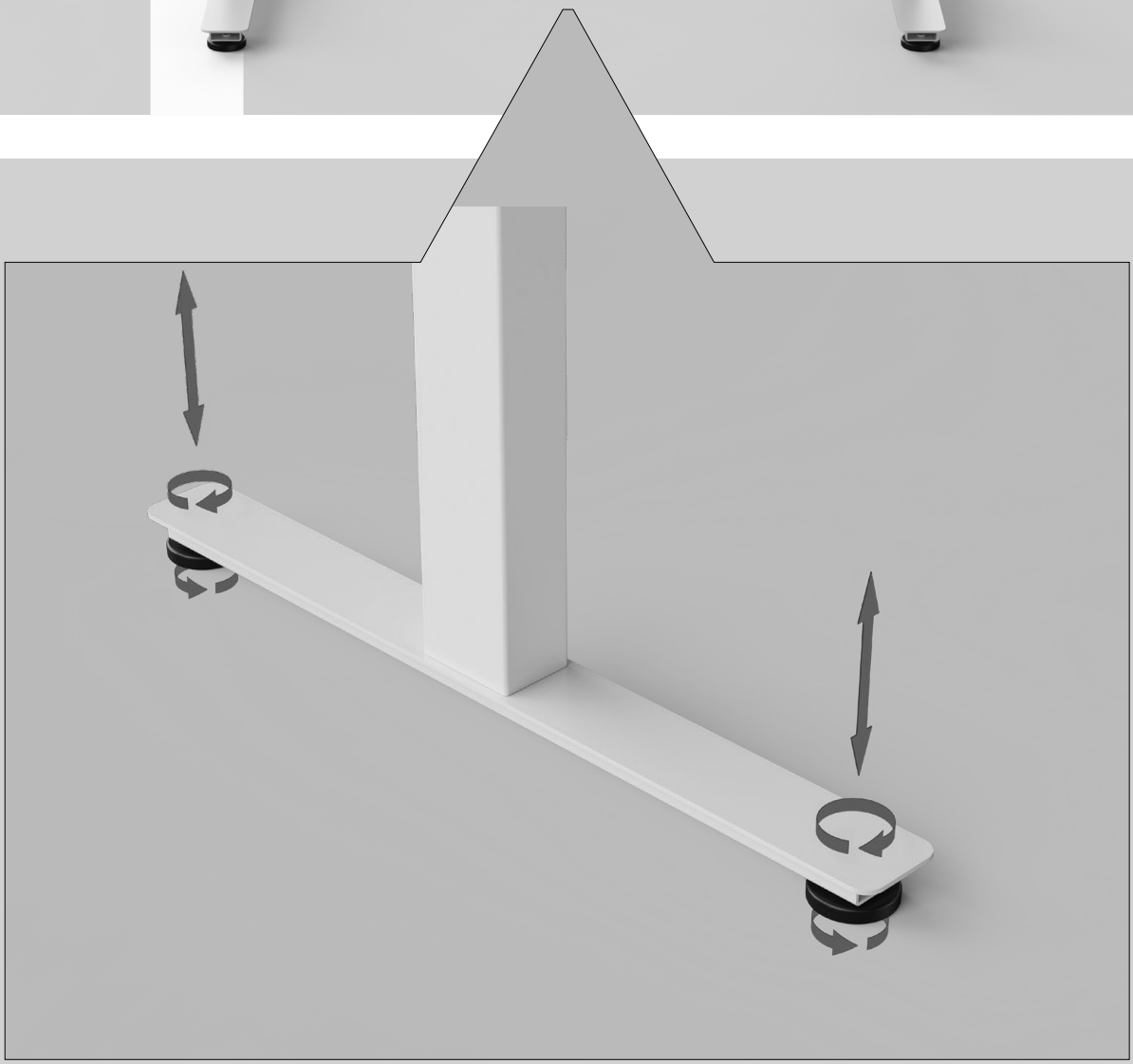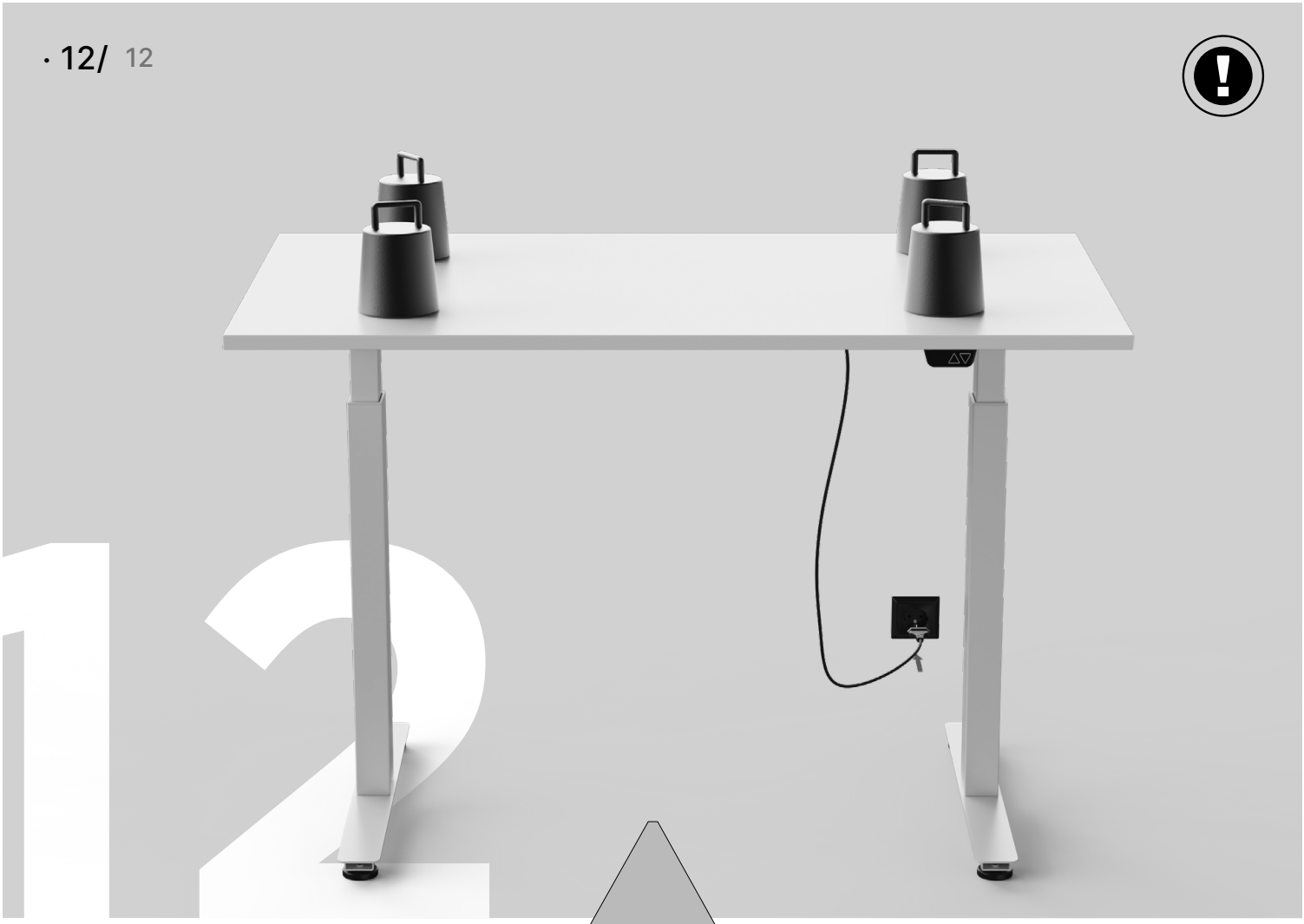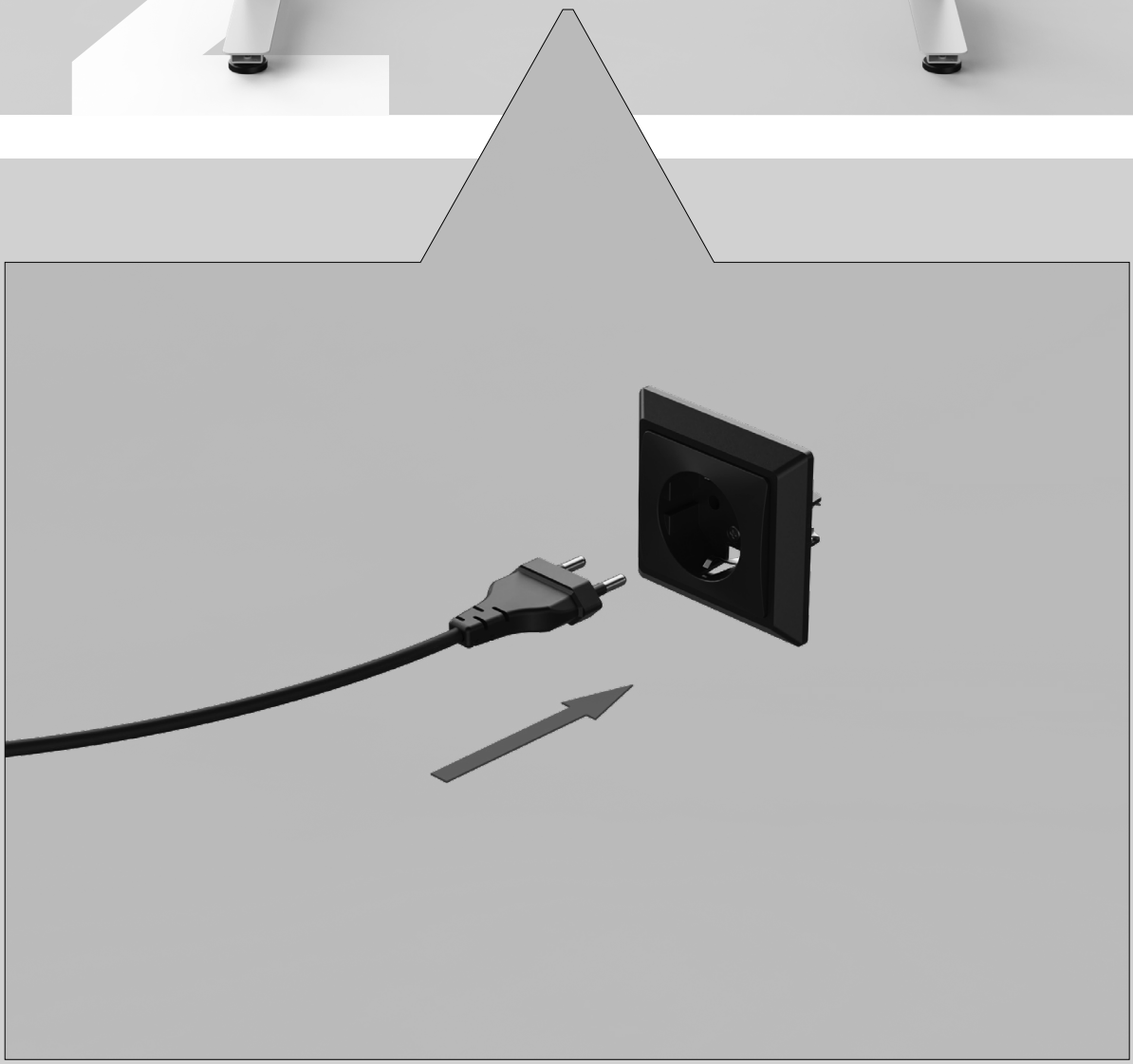
2 x
b